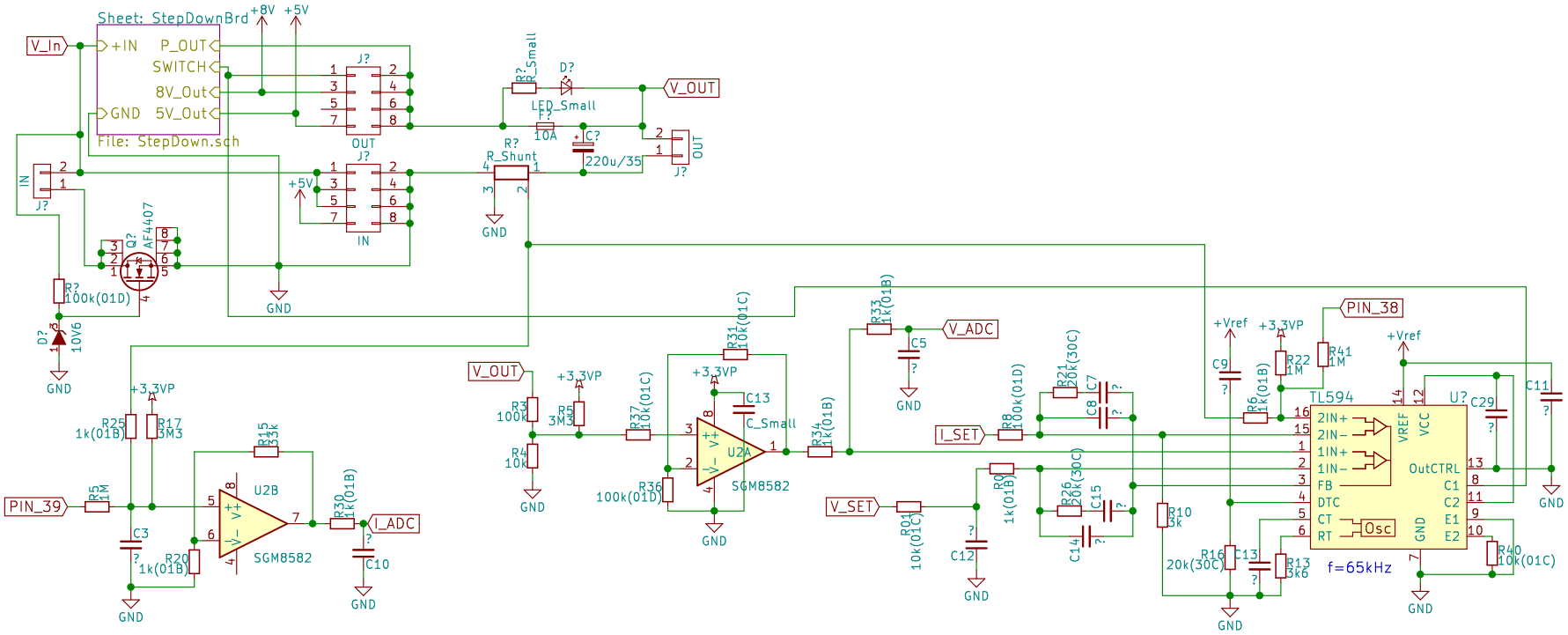

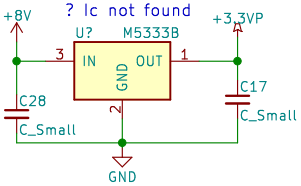

Sheet: CPU

File: CPU.sch

v0.2: Optical Changes, Renamed, R36, R20 added

Sheet: /
File: DPS3003.sch

Title:

Size: A4	Date: 2017-11-16	**Rev: v0.2**
KiCad E.D.A. kicad 4.0.7		Id: 1/3

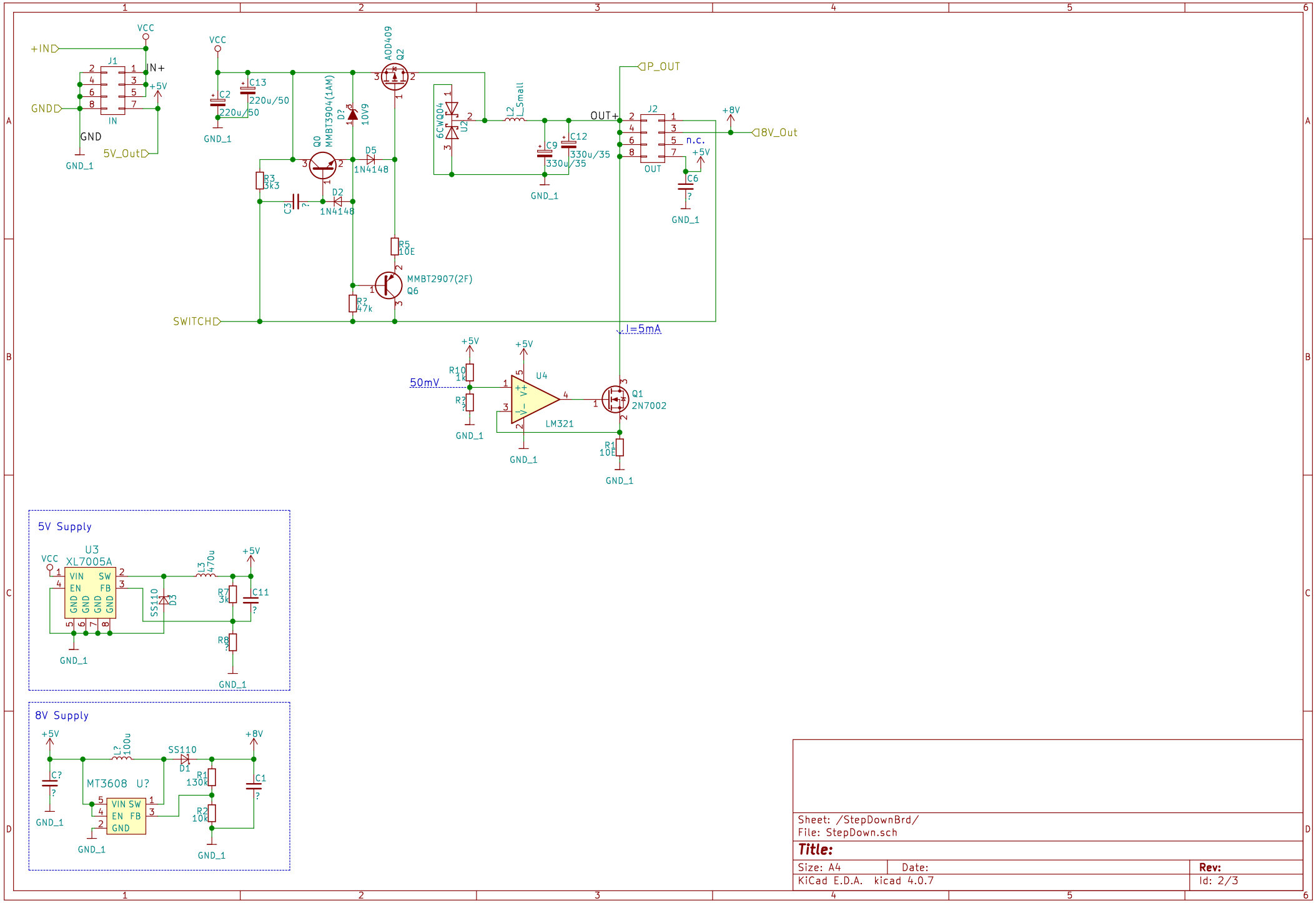

Sheet: /StepDownBrd/
File: StepDown.sch

Title:

Size: A4	Date:	Rev:
KiCad E.D.A. kicad 4.0.7		Id: 2/3

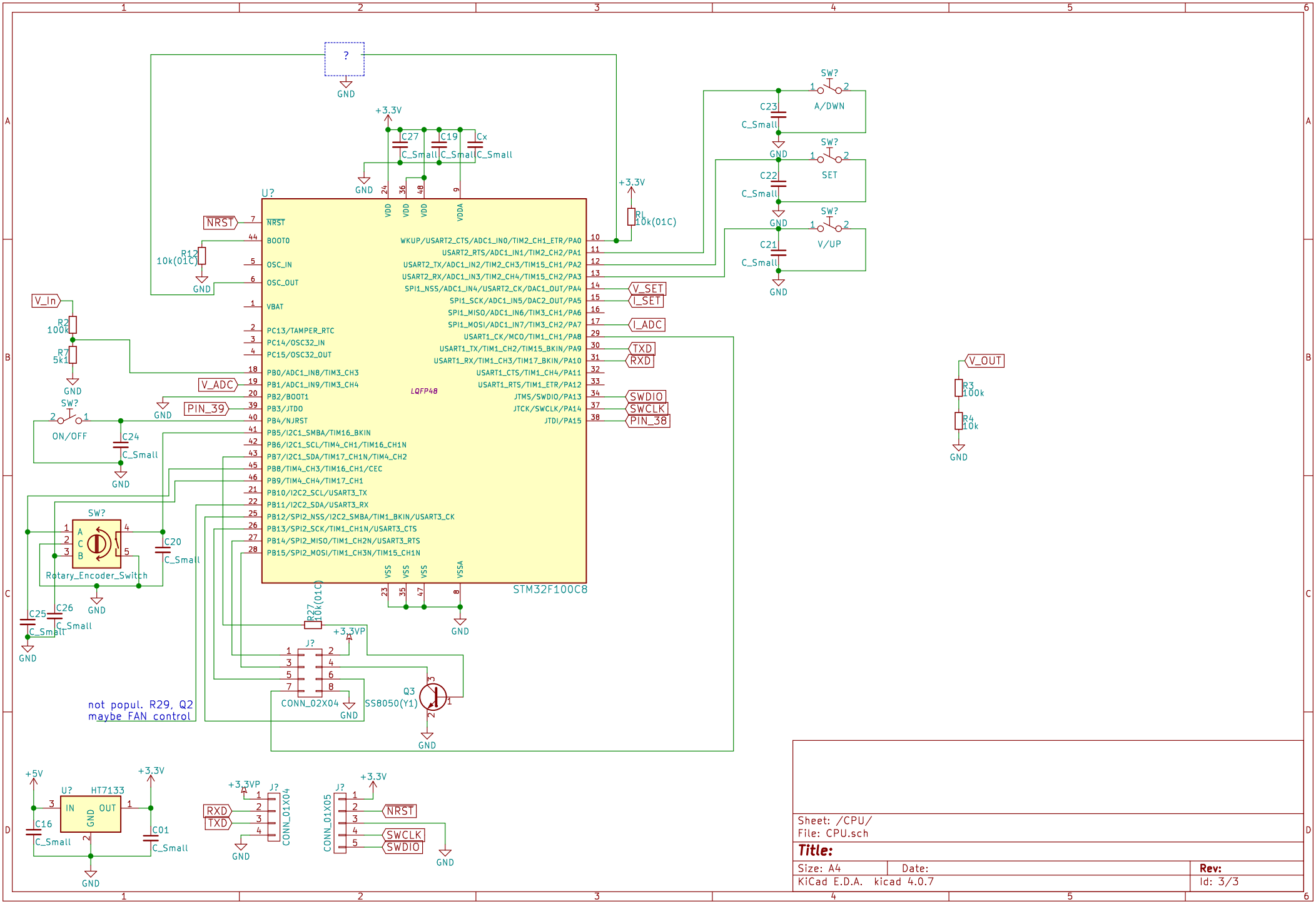
U?
STM32F100C8
LQFP48
NRST
BOOT0
OSC_IN
OSC_OUT
VBAT
PC13/TAMPER_RTC
PC14/OSC32_IN
PC15/OSC32_OUT
PB0/ADC1_IN8/TIM3_CH3
PB1/ADC1_IN9/TIM3_CH4
PB2/BOOT1
PB3/JTDO
PB4/NJRST
PB5/I2C1_SMBA/TIM16_BKIN
PB6/I2C1_SCL/TIM4_CH1/TIM16_CH1N
PB7/I2C1_SDA/TIM17_CH1N/TIM4_CH2
PB8/TIM4_CH3/TIM16_CH1/CEC
PB9/TIM4_CH4/TIM17_CH1
PB10/I2C2_SCL/USART3_TX
PB11/I2C2_SDA/USART3_RX
PB12/SPI2_NSS/I2C2_SMBA/TIM1_BKIN/USART3_CK
PB13/SPI2_SCK/TIM1_CH1N/USART3_CTS
PB14/SPI2_MISO/TIM1_CH2N/USART3_RTS
PB15/SPI2_MOSI/TIM1_CH3N/TIM15_CH1N
WKUP/USART2_CTS/ADC1_IN0/TIM2_CH1_ETR/PA0
USART2_RTS/ADC1_IN1/TIM2_CH2/PA1
USART2_TX/ADC1_IN2/TIM2_CH3/TIM15_CH1/PA2
USART2_RX/ADC1_IN3/TIM2_CH4/TIM15_CH2/PA3
SPI1_NSS/ADC1_IN4/USART2_CK/DAC1_OUT/PA4
SPI1_SCK/ADC1_IN5/DAC2_OUT/PA5
SPI1_MISO/ADC1_IN6/TIM3_CH1/PA6
SPI1_MOSI/ADC1_IN7/TIM3_CH2/PA7
USART1_CK/MCO/TIM1_CH1/PA8
USART1_TX/TIM1_CH2/TIM15_BKIN/PA9
USART1_RX/TIM1_CH3/TIM17_BKIN/PA10
USART1_CTS/TIM1_CH4/PA11
USART1_RTS/TIM1_ETR/PA12
JTMS/SWDIO/PA13
JTCK/SWCLK/PA14
JTDI/PA15
VDD
VDDA
VSS
VSSA
+3.3V
GND
C27
C_Small
C19
Cx
R1
10k(01C)
R12
10k(01C)
R27
10k(01C)
+3.3VP
SW?
A/DWN
SET
V/UP
C23
C22
C21
V_SET
I_SET
I_ADC
TXD
RXD
SWDIO
SWCLK
PIN_38
V_OUT
R3
100k
R4
10k
V_In
R2
100k
R7
5k1
ON/OFF
C24
V_ADC
PIN_39
Rotary_Encoder_Switch
C20
C25
C26
J?
CONN_02X04
Q3
SS8050(Y1)
not popul. R29, Q2
maybe FAN control
+5V
U?
HT7133
IN
OUT
C16
C01
CONN_01X04
CONN_01X05
Sheet: /CPU/
File: CPU.sch
Title:
Size: A4
Date:
Rev:
KiCad E.D.A. kicad 4.0.7
Id: 3/3